INSTALLATION MANUAL OF CROSS BAR FOR SIENNA 2011-2020

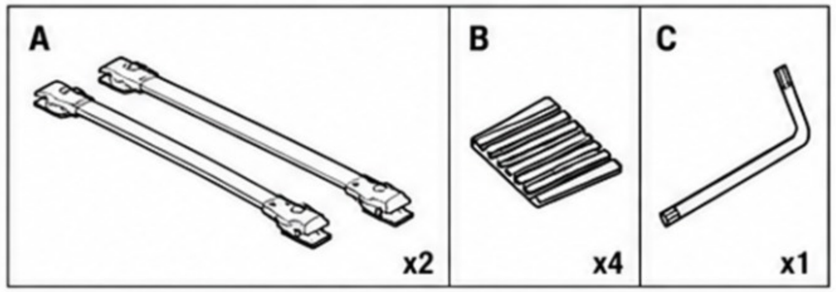

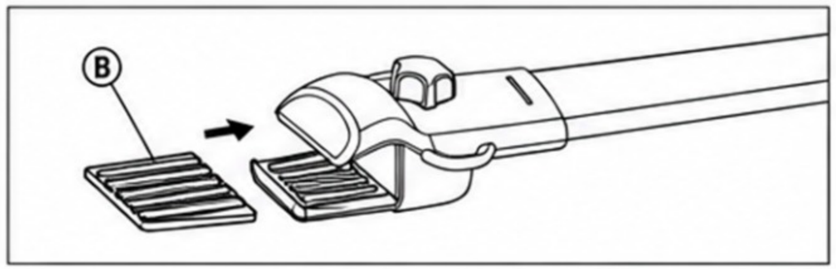

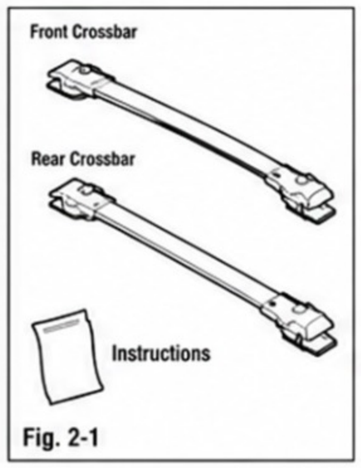

Fig. 2-1

1. Prepare the Vehicle.

⚠ (a) Clean work area before installing crossbars.

(1) Saturate a clean lint-free cloth with VDC approved cleaner and clean the work surface of the vehicle. Follow the solvent manufacturer's directions carefully. Do not allow cleaner to air dry.

(2) Wipe the clean surface with a clean, dry, lint-free cloth.

2. Install the Crossbars.

(a) Remove the crossbars and instructions from the packaging (Fig. 2-1).

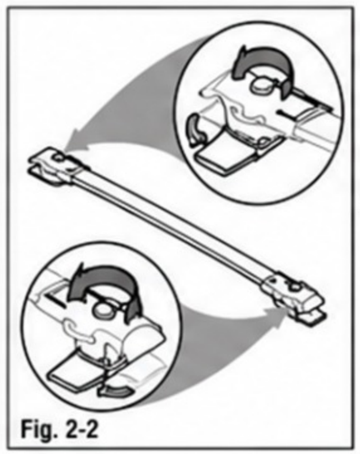
Fig. 2-2

(b) Loosen the clamps by turning the knobs counterclockwise (Fig. 2-2).

⚠ (c) Rotate the lower clamp 90°, so that the crossbars can be lowered between the roof rails (Fig.2-2).

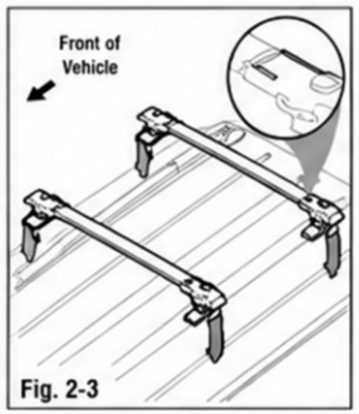

Fig. 2-3

(d) Lower the crossbars between the roof rails (Fig. 2-3).

NOTE: The front and rear crossbars are interchangeable. Place the FORWARD arrow on the clamp facing towards the front of vehicle.

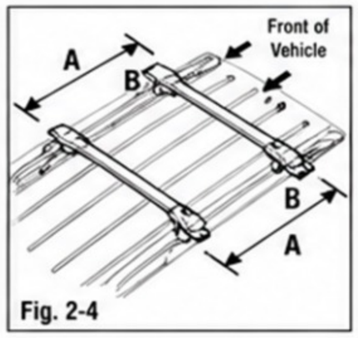

Fig. 2-4

⚠ (e) Position the front and rear crossbars so that they are parallel (Fig. 2-4).

(1) A = 820mm (32-1/4 in) from the end of the rail (Fig. 2-4).

(2) B = 120mm (4-3/4 in) from the end of the rail (Fig. 2-4).

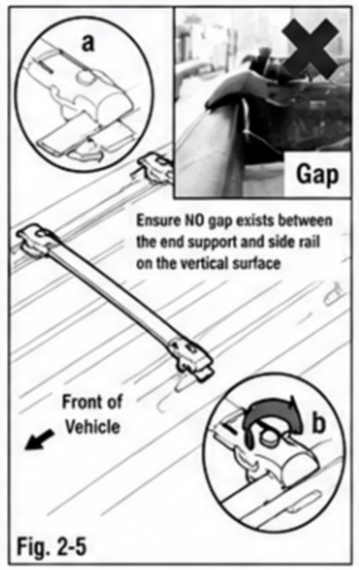

Fig. 2-5

⚠ (f) Once in position, rotate the lower clamps under the side rails (Fig. 2-5a).

NOTE: Ensure no gap exists between the end support and the side rail on the vertical surface, both left and right side.

(g) Tighten the clamps by turning the knobs clockwise as much as possible until they are secure (Fig. 2-5b).

(h) Place the installation instructions in the glove compartment.

NOTE: To avoid injury or damage, periodically verify that the crossbars are secure and observe load limits as printed on the crossbars.